# RS Procedure 2017_038

Feb 13th

# 2017

This procedure describes about the how to replace the “Injection unit Bearing in units in RS. This is applicable to S-2000i300A/B”

## [Injection Bearing unit replacement procedure]

# Procedure for replacement of injection bearing in RS- S-2000i300 A/B model Machine

## General Cautions

a. Safety first.

b. Special care will be needed for handling any parts.

c. Mark on the any parts for assembling in the original position and direction when disassembling.

## Required tools

- General working tools
- Four slings (same length)

  The slings with no damages are needed. (The weight of the rear platen is about 1.5 ton.)
- Four eye bolts M20

  Confirm no cracks or no bending on the male threads. (New eye bolts are recommended.)
- Oil stone

  Prepare the fine-grit oil stone.
- Penetrant CRC 5-56 or the like

  The low viscosity spray type of penetrant will be easy to use.
- Inside micrometer (for measurement of platen parallelism)
- Mold

  The mold used on the machine as frequently as possible will be needed.
- Oil-based Marker pen
- Grease gun (adopting the cartridge grease)
- Grease FS-2 (400cc cartridge for grease gun)
- LOC-TITE 242

  Medium adhesive for threads.

  Apply it to all the screw threads except the cover screws unless otherwise specified.

- The tightening torque of cap screws

  Tighten the screw in the following torque, unless otherwise specified.

Tightening torque for Cap Screw

| Screw size | M6 | M8 | M10 | M12 | M14 | M16 |
|---|---|---|---|---|---|---|
| Torque (Nm) | 12.3 | 28.9 | 58.8 | 101 | 162 | 245 |

## Working Procedure

## Procedure for replacement of injection bearing in RS- S-2000i300A/B model Machine

1)Separate the BALL SCREW from X axis assembly (V304)

2) X Remove X - axis Pulley

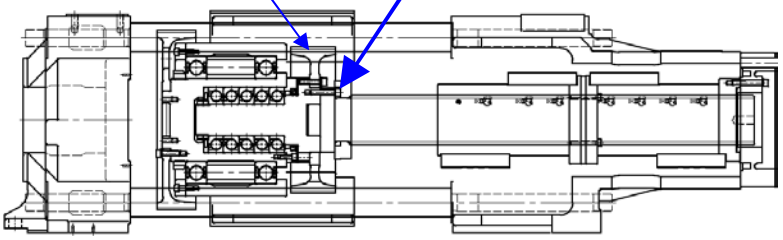

3) Put STOPPER back on the BALL SCREW to prevent over travel.

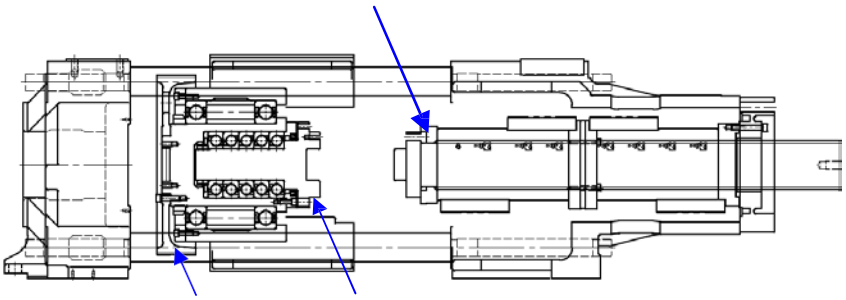

4) Hold C-axis BEARING and check whether V304 is stuck.

In case X axis assembly got stuck (V304)

5)Remove C-axis PULLEY and BEARING RETAINER.
Because C-axis PULLEY is too big to be taken off through TIE RODs, put it with cloth or something soft on TIE RODs for protection.

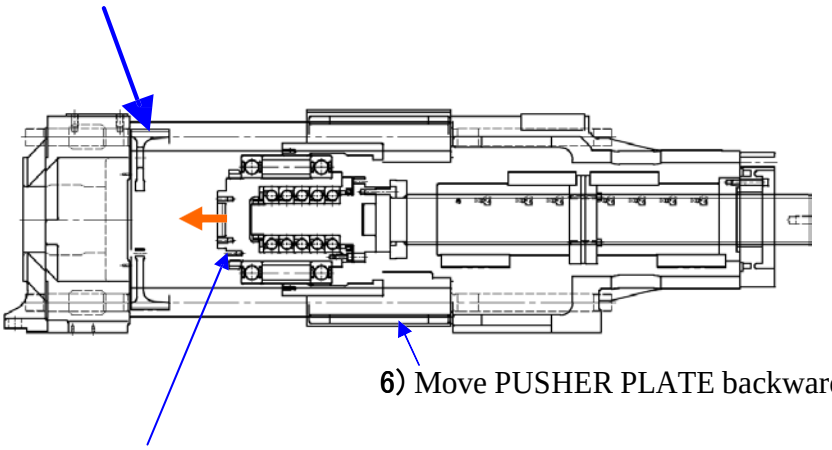

6) Move PUSHER PLATE backward.

7) Extract V303 and V304 to the front. Use axial force of BALL SCREW as necessary.

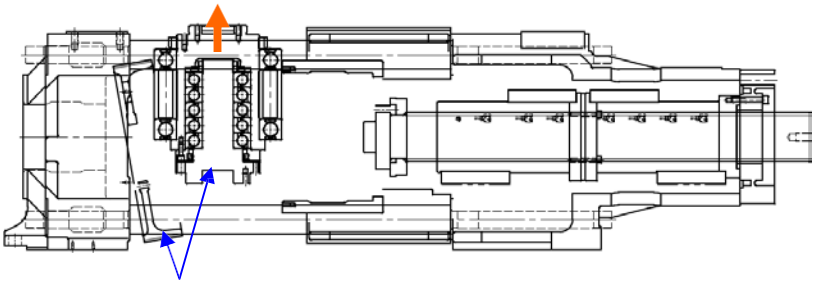

**8)**Slant C-axis PULLEY, and rotate V303 and V304. Then take them out upward.

In the case where V304 is not stuck

**6)**Join BALL SCREW to V304.

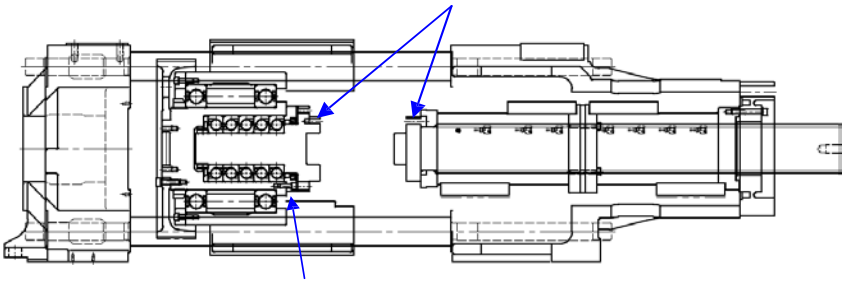

**5)** Remove bolts joining V303 and V304.

**7)** Put a piece of wood between PUSHER PLATE and REAR PLATE. Then, move BALL SCREW backward to extract V304.

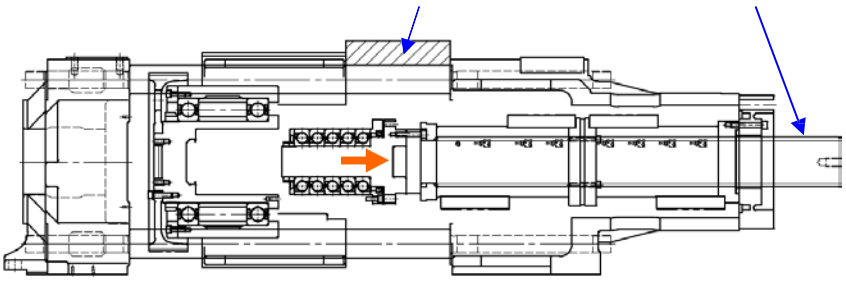

Pull Screw Sleeve(V303) to the front.

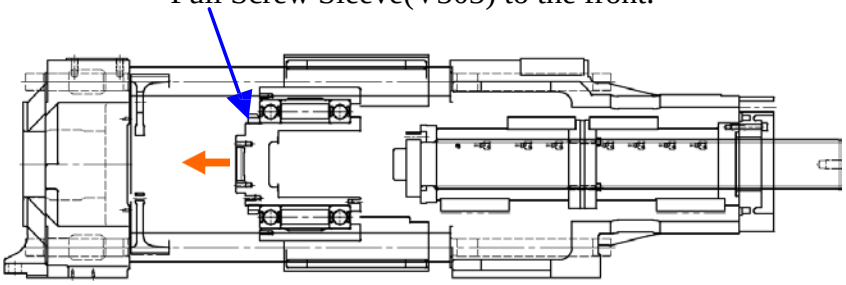

**SCREW SLEEVE ASSY A290-5266-V303#STD**

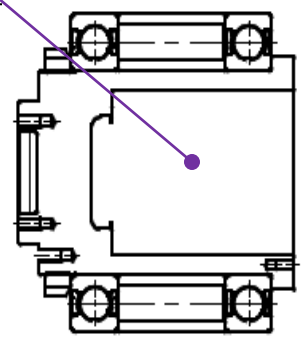

**X-AXIS ASSYA290-5266-V304#STD**

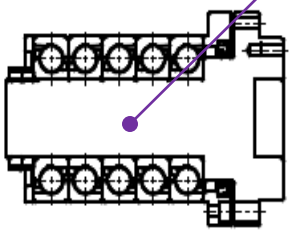

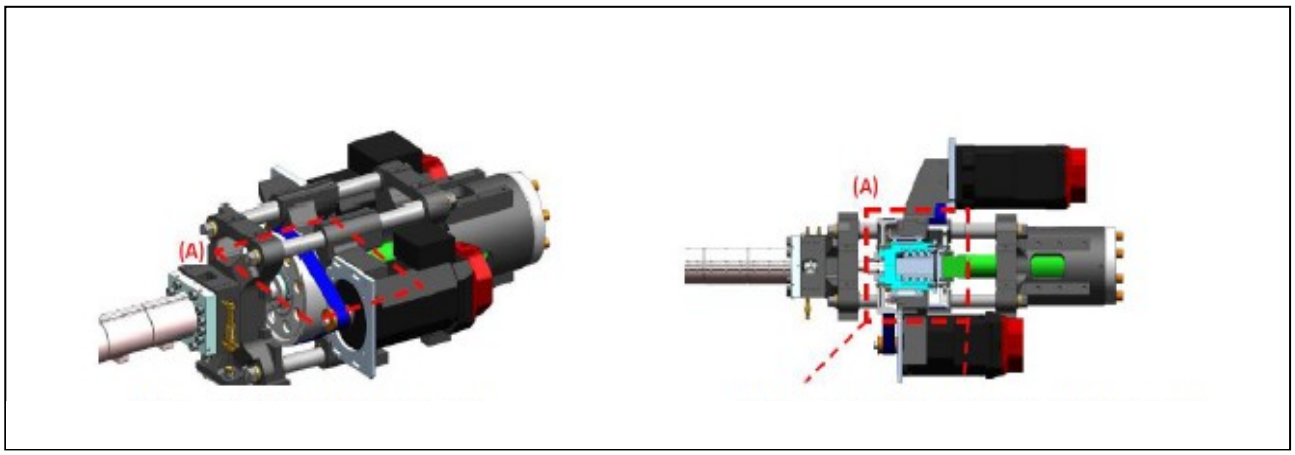


**Fig1.Injection unit**

**Fig.2 Injection unit top view**